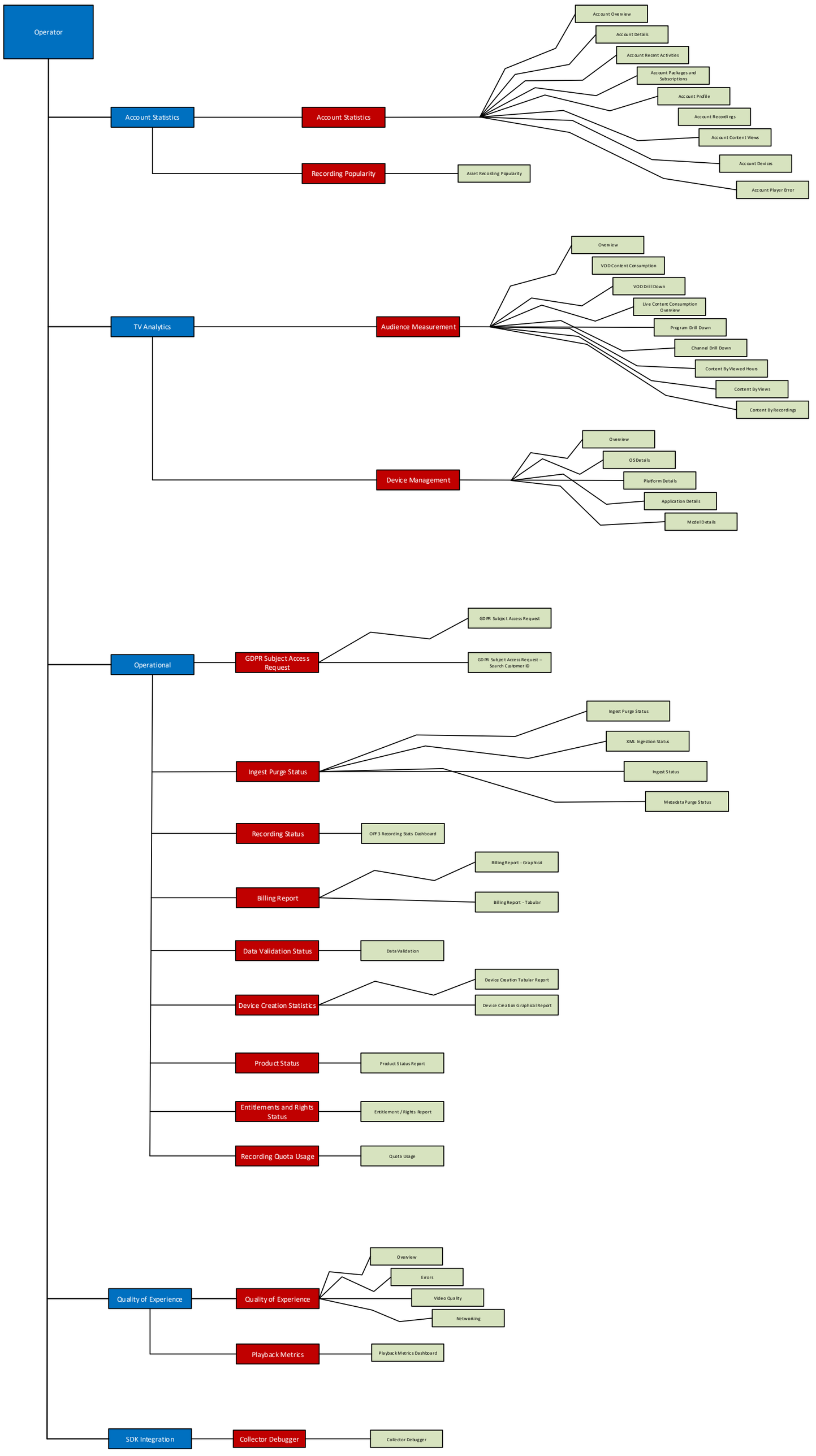
Operator
Account Statistics
Account Statistics
Account Overview
Account Details
Account Recent Activities
Account Packages and Subscriptions
Account Profile
Account Recordings
Account Content Views
Account Devices
Account Player Error
Recording Popularity
Asset Recording Popularity
TV Analytics
Audience Measurement
Overview
VOD Content Consumption
VOD Drill Down
Live Content Consumption Overview
Program Drill Down
Channel Drill Down
Content By Viewed Hours
Content By Views
Content By Recordings
Device Management
Overview
OS Details
Platform Details
Application Details
Model Details
Operational
GDPR Subject Access Request
GDPR Subject Access Request
GDPR Subject Access Request – Search Customer ID
Ingest Purge Status
Ingest Purge Status
XML Ingestion Status
Ingest Status
Metadata Purge Status
Recording Status
OPF3 Recording Stats Dashboard
Billing Report
Billing Report - Graphical
Billing Report - Tabular
Data Validation Status
Data Validation
Device Creation Statistics
Device Creation Tabular Report
Device Creation Graphical Report
Product Status
Product Status Report
Entitlements and Rights Status
Entitlement / Rights Report
Recording Quota Usage
Quota Usage
Quality of Experience
Quality of Experience
Overview
Errors
Video Quality
Networking
Playback Metrics
Playback Metrics Dashboard
SDK Integration
Collector Debugger
Collector Debugger